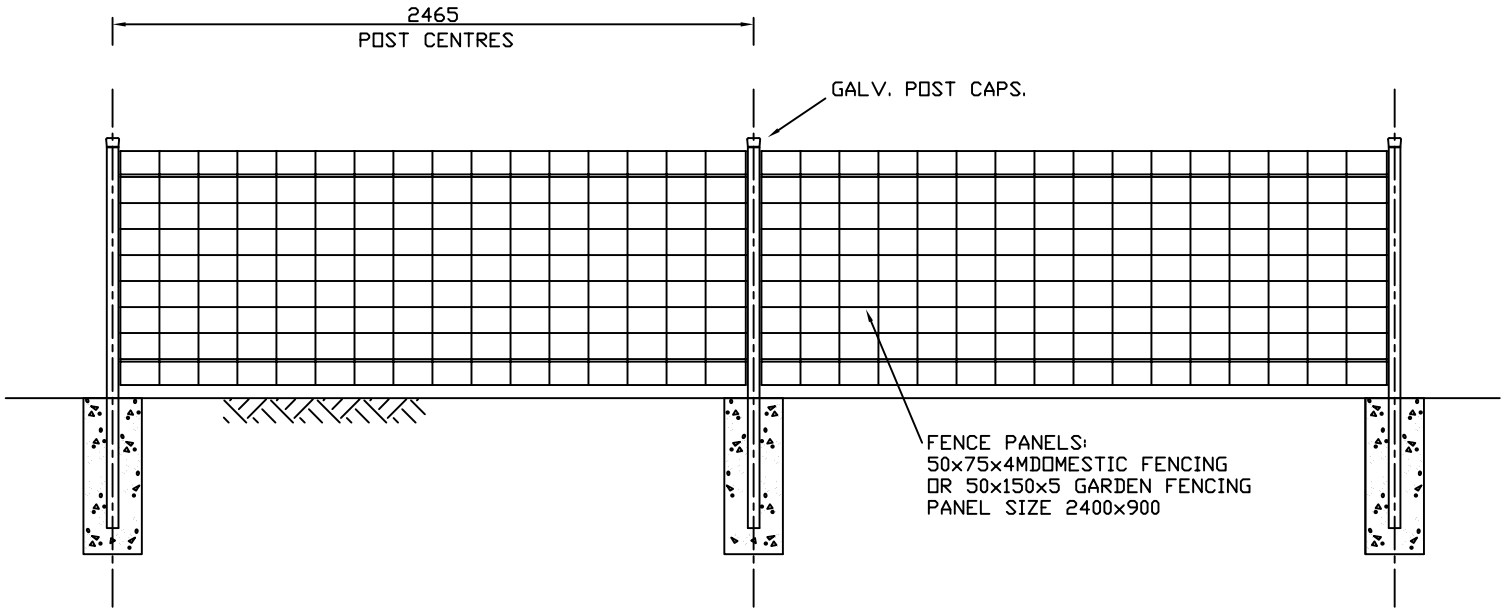

GENERAL ARRANGEMENT

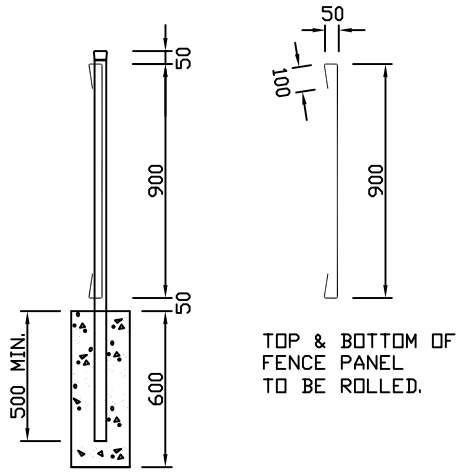

POST DETAIL

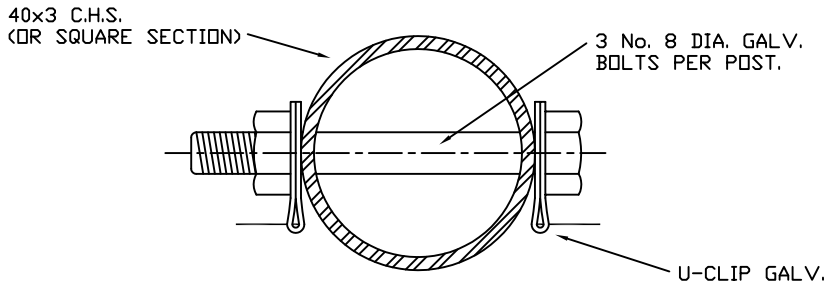

METHOD OF FIXING PANELS
TO FENCE POST.

ALL DIMENSIONS IN MILLIMETRES.

No.	AMENDMENTS	CHECKED	DATE	APPROVED

DRAFTING		DESIGN	
DRAWN	DATE	DESIGNED R.R.W.	DATE OCT 92
CHECKED	DATE	RECOMMENDED/CHECKED K. SAMS	DATE 28/10/92
APPROVED R. WILSON	DATE 28/10/92	ACCEPTED	DATE

DEPARTMENT OF INFRASTRUCTURE, ENERGY AND RESOURCES, TASMANIA

STEEL POST AND WELDED MESH FENCE

FROM LINK No. / DISTANCE	TO LINK No. / DISTANCE
CONTRACT No.	SHEET No.
DRG. No. 3402-15/P9	